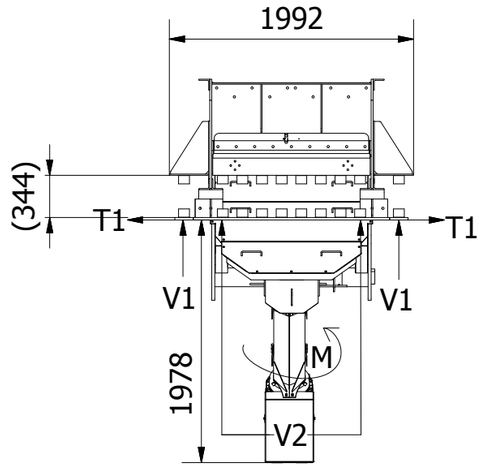

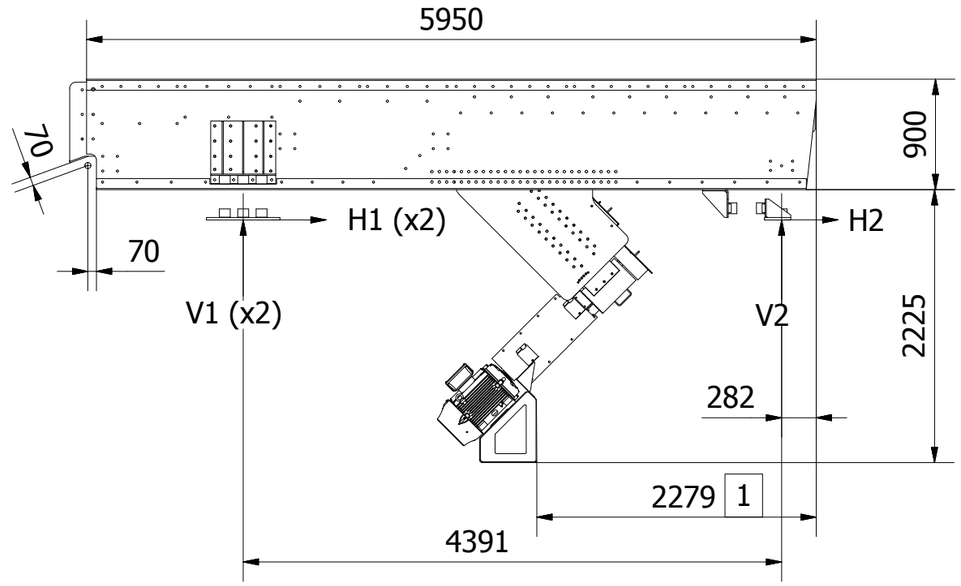

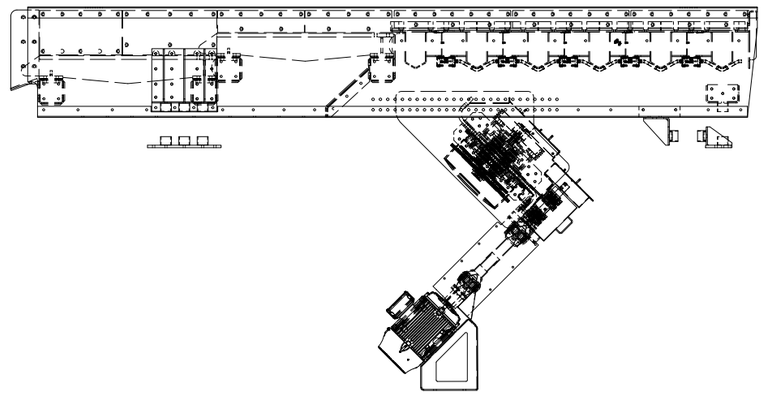

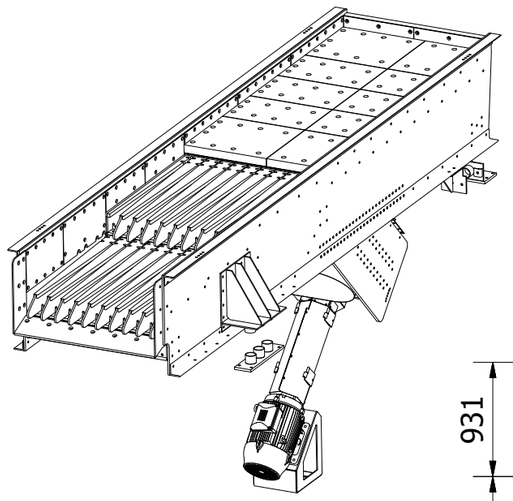

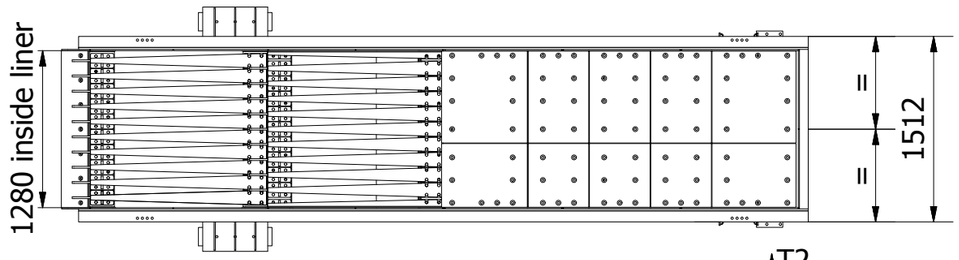

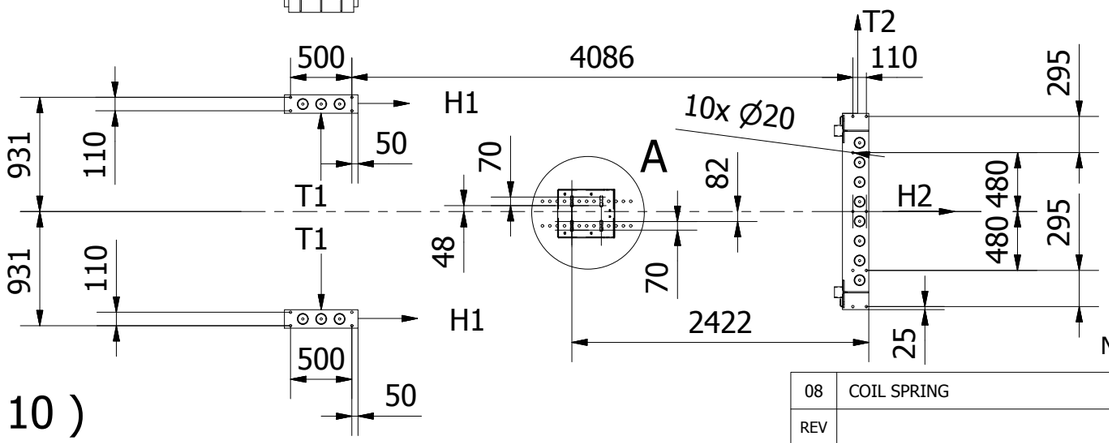

1 - Vibrator location depending of equipments

MOTORS:
- Motor type : squirrel cage
- 2 x MV3
- Power : 1 x 30 kW
- Speed : 1500 rpm
- Minimaltorque from 0 to 300 rpm : M = 370 m.N.

- FORCEMAINTENANCE PULLEY BLOCK : 10 kN
- Maxi mass without motors : 6600 kg

The steel structures and concrete supports must be designed in order to limit residual vibration level in screen's supports, in accordance with standard ISO 10816 (machine group 4):
- maximum allowable value: 18mm/s or 0,7 Inch/second (RMS value in range 10-1000Hz)
- 3 orthogonal directions for measurements: vertical, longitudinal and lateral

- LOADS AT POINT OF SUPPORT (PER CORNER) WITHOUT MATERIAL				
- STATIC LOADS	- DYNAMIC LOADS			
- VERTICAL	- FREQUENCY RANGE	- VERTICAL	- HORIZONTAL	- TRANSVERSAL
V1 = 18,1 kN	DE 12,5 Hz A 16,5 Hz	V1 = ± 4,77 kN	H1 = ± 1,59 kN	T1 = ± 0,48 kN
V2 = 28,3 kN	DE 12,5 Hz A 16,5 Hz	V2 = ± 12,72 kN	H2 = ± 4,24 kN	T2 = ± 1,27 kN

Nota- At start and stop dynamic loads are 4-5 times higher

A (1 : 10)

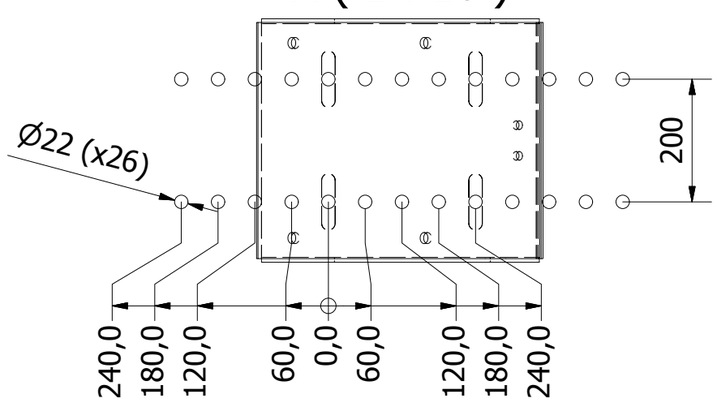

MINIMAL GAP BETWEEN STATIC AND VIBRATING PARTS

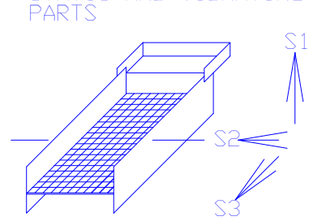

S1 = 70
S2 = 70
S3 = 70

REV	DESCRIPTION OF CHANGE	LOC.	BY	DATE	ECN
08	COIL SPRING	..	GUIY	01/08/2012	68145

WEIGHT							SCALE
13105,5 kg	.. SURFACE PREPARATION, CLEANING AND PAINTING ACCORDING TO COMPANY STANDARD 03-01-01	MACHINE FINISH UNLESS OTHERWISE STATED Ra6.3 N9	TOLERANCES GENERALES - Dimensions en mm: MACHINE SURFACES XXX. (>500) ±3; XXX. (<500) ±1,5; .X ±0,5; .XX ±0,13	ANGLE TOLERANCE COMPANY STD 02-02-13	TORCH CUTTING ELEMENT NORME ISO 9013-431	WELDMENT ASSEMBLY NORME ISO 13920-BF	1:50

Drawn by: CROL Date: 01/06/2012	1st ANGLE PROJECTION	ASSEMBLY AND DESCRIPTION MACHINE ASSEMBLY	Page
Checked by: Date:	Product :	PART NAME	1/2
Approved by: Date:	VF561 2V	VF561 2V	

THE INFORMATION CONTAINED HERE IN IS CONFIDENTIAL AND PROPRIETARY TO METSO GROUP AND IS NOT TO BE REPRODUCTED, DISCLOSED TO A THIRD PARTY, MODIFIED OR USED WITHOUT PRIOR PERMISSION OF METSO GROUP OR ITS DULY AUTHORIZED REPRESENTATIVE, ALL RIGHTS RESERVED.

metso

DWG SIZE	DRAWING NUMBER			REV
	PREFIX	CODE	SUFFIX	
A3		TD24B114		08